MT6625L Data Sheet

Version: 0.5

Release date: 2014-09-19

© 2010 - 20152010 - 2015 MediaTek Inc.
This document contains information that is proprietary to MediaTek Inc.
Unauthorized reproduction or disclosure of this information in whole or in part is strictly prohibited.

Specifications are subject to change without notice.

Document Revision History

Revision	Date	Author	Description
0.1A	2013/11/22	Conan Zhan	First release for template consolidation.
0.2A	2014/04/17	Conan Zhan	2nd release, update MT6625L marking information.
0.3A	2014/04/18	Min Chen	3nd release, update MT6625L WiFi/BT specs based on HQA results.
0.4A	2014/05/15	Min Chen	1. Update Rising/Falling Timing Diagram and add V_{IH}/V_{IL}/V_{OH}/V_{OL}. 2. Change pin 30 to NC
0.5A	2014/09/19	Min Chen	Update BT specification compliant and remove WiFi eLNA support

This document contains information that is proprietary to MediaTek Inc.
Unauthorized reproduction or disclosure of this information in whole or in part is strictly prohibited.

Table of Contents

Document Revision History **2**
Table of Contents **3**
1 System Overview **5**
1.1 Functional Block Diagram 5
1.2 Features 6
1.2.1 Wi-Fi/BT 7
1.2.2 FM 7
1.2.3 GPS 7
1.2.4 IPD 8
2 Pin Definitions **9**
2.1 IO Definitions 9
2.2 Pin Definitions 9
3 Electrical Characteristics **11**
3.1 Absolute Maximum Ratings 11
3.2 Recommended Operating Range 11
3.3 Power Consumption and Supply Specifications 11
3.4 Power-on/off Sequence 12
3.5 Digital Logic Characteristics 13
3.5.1 Timing Diagram Convention 13
3.5.2 Rising/Falling Time Definition 13
3.5.3 Protocals 14
3.6 MT6625L TOP Building Blocks 15
3.6.1 Reference Clock 15
3.6.2 Thermal ADC 15
3.6.3 Always-on LDO 16
3.7 Wi-Fi/BT 16
3.7.1 Wi-Fi/BT Specifications 16
3.7.2 2.4GHz Wi-Fi/BT Tx 25
3.7.3 2.4GHz Wi-Fi/BT Rx 26
3.7.4 2.4GHz Wi-Fi/BT Sx 26
3.7.5 5GHz WiFi Tx 26
3.7.6 5GHz WiFi Rx 26
3.7.7 5GHz WiFi Sx 26
3.8 FM 27
3.8.1 FM Radio Descriptions 27
3.9 GPS 29
3.9.1 GPS Radio Descriptions 29
3.10 IPD 33
3.10.1 IPD Block Diagram for MT6625L 33

This document contains information that is proprietary to MediaTek Inc.
Unauthorized reproduction or disclosure of this information in whole or in part is strictly prohibited.

4 Mechanical Information ... 35
4.1 Device Physical Dimension/Part Number ... 35

List of Figures

Figure 1-1 MT6625L block diagram. Only IPD is different from MT6625 for more flexibility. ... 6
Figure 3-1. Timing diagram conventions ... 13
Figure 3-2. Rising and falling times diagram ... 13
Figure 3-3. 3-wire SPI timing diagram ... 14
Figure 3-4. BT 5-wire SPI access ... 15
Figure 3-5. FM 2-wire interface ... 15
Figure 3-6. Long/short antenna application scenario ... 27
Figure 3-7. GPS block diagram ... 33
Figure 3-9. IPD block diagram for MT6625L ... 34
Figure 4-1. Physical dimension of MT6625/6625L. ... 35
Figure 4-2. Top view of MT6625/6625L. ... 35

List of Tables

Table 2-1. I/O definitions used inTable 2-2 ... 9
Table 2-2. MT6625L pin definitions ... 9
Table 3-1. Absolute maximum ratings ... 11
Table 3-2. Recommended operating range ... 11
Table 3-3. AVDD18 specifications ... 11
Table 3-4. AVDD28 specifications ... 12
Table 3-5. AVDD33 specifications ... 12
Table 3-6. 2.4GHz receiver specifications ... 17
Table 3-7. 2.4GHz transmitter specifications ... 18
Table 3-8. Basic data rate receiver specifications ... 21
Table 3-9. Basic data rate transmitter specifications ... 22
Table 3-10. Enhanced data rate receiver specifications ... 22
Table 3-11. Enhanced data rate transmitter specifications ... 23
Table 3-12. Bluetooth LE receiver specifications ... 24
Table 3-13. Bluetooth LE transmitter specifications ... 25
Table 3-14. FM specification. ... 28
Table 3-15. GPS RF specifications for GPS/Galileo, GPS/GLONASS, GPS/Beido modes ... 30

This document contains information that is proprietary to MediaTek Inc.
Unauthorized reproduction or disclosure of this information in whole or in part is strictly prohibited.

1 System Overview

1.1 Functional Block Diagram

MT6625L is a 4-in-1 connectivity chip which contains a 2.4GHz Wi-Fi/Bluetooth transceiver front-end, a 5GHz Wi-Fi transceiver front-end, a GPS receiver front-end and a complete FM receiver, along with Integrated Passive Device (IPD) in a QFN40 pacakge. Simplified block diagram and how MT6625L is used are shown in **Error! Reference source not found.**. An always-on low-dropout regulator (ALDO) provides supply voltage to top control logics in MT6625L. The top control logics controls each subsystem independently. Each subsystem also has dedicated LDOs. A thermal sensor and a low-speed ADC (Analog-to-Digital Converter) is provided to monitor MT6625L's temperature variation. MT6625L does not have its dedicated crystal oscillator. It uses either an external (maybe temperature compensated) oscillator or clock source from companion chips in the platform such as MT6166.

For Wi-Fi and Bluetooth, MT6625L provides an advanced switching mechanism which allows fast switching between Wi-Fi and BT modes. Hardware sharing and reuse is maximized. The transceiver front-ends are on MT6625L while the ADC/DAC (Analog-to-Digital Converter/Digital-to-Analog Converter) are in the companion modem chip. The interface driver/receiver buffer is designed to drive PCB trace loading. The GPS IP in MT6625L is similar to Wi-Fi/Bluetooth such that the ADC/DAC is in the companion modem chip. In contrast, the FM system integrates the modem and ADC in MT6625L, and no interface drivers/buffers are required. The IPD of MT6625L integrates 2.4G WiFi/BT balun and its matching network; and a GPS matching network (Figure 1-1).

This document contains information that is proprietary to MediaTek Inc.
Unauthorized reproduction or disclosure of this information in whole or in part is strictly prohibited.

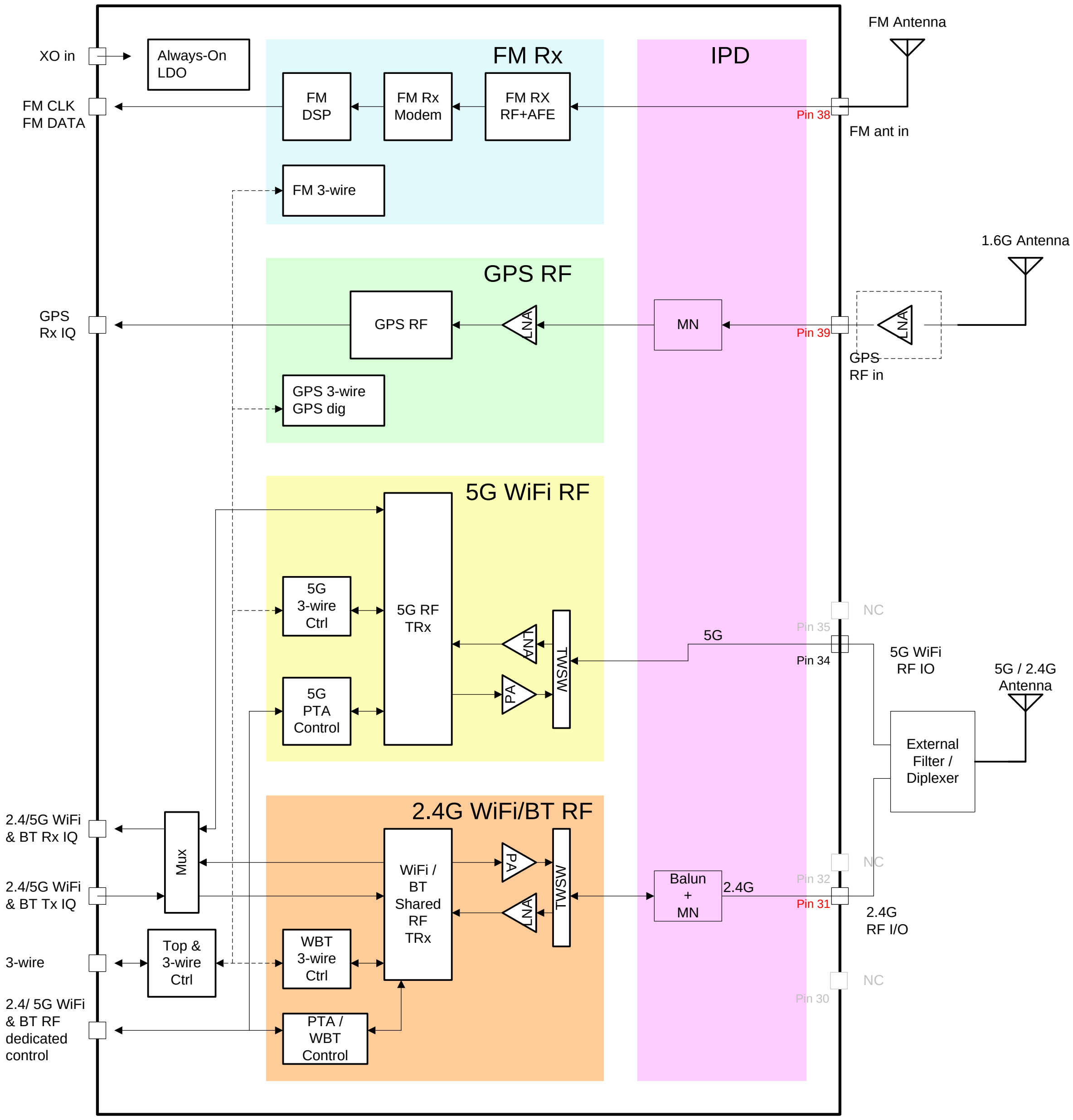

Figure 1-1 MT6625L block diagram. Only IPD is different from MT6625 for more flexibility.

1.2 Features

- MT6625L is a 4-in-1 connectivity RF chip which contains front-ends of a 2.4GHz Wi-Fi and Bluetooth transceiver, a 5GHz Wi-Fi transceiver, a GPS receiver and an FM receiver.
- MT6625L supports integrated passive device to save footprint on PCB and cost due to Wi-Fi/Bluetooth/GPS external BoM (bill of materials) in a 40-pin QFN package.

This document contains information that is proprietary to MediaTek Inc.
Unauthorized reproduction or disclosure of this information in whole or in part is strictly prohibited.

- Supports GPS external LNA.
- Option of IPD: MT6625L offers front-end components flexibility for various filtering / rejection requirements, multiple antenna configurations (e.g., 2-antenna and 3-antenna). Its sister product MT6625 offers higher integration level by integrating a 2.4G/5G diplexer.

1.2.1 Wi-Fi/BT

WLAN

- Dual-band (2.4GHz and 5GHz) single stream 802.11 a/ b/g/n RF
- Supports dual-band Wi-Fi and Bluetooth TDD operation and single-antenna topology with integrated TR-switches, baluns and a diplexer
- Integrated 2.4GHz PA with max. 20dBm CCK output power and 5GHz PA with max. 17dBm OFDM 54Mbps output power
- Typical Rx sensitivity with companion chip modem: -76.5dBm at both 11g 54Mbps mode and 11a 54Mbps mode
- Integrated power detector to support per packet Tx power control
- Built-in calibrations for PVT variation
- Fully integrated frequency synthesizers to support multiple crystal clock frequencies

Bluetooth

- Bluetooth specification v2.1+EDR, 3.0+HS and v4.1+HS compliant
- Integrated PA with 8dBm (class 1) transmit power
- Typical Rx sensitivity with companion chip modem: GFSK -94dBm, DQPSK -93dBm, 8-DPSK -87.5dBm
- Low-power scan function to reduce power consumption in scan modes

1.2.2 FM

- 65 -108MHz with 50kHz step
- Supports RDS/RBDS
- Digital stereo modulator/demodulator
- Digital audio interface (FM 2-wire bus)
- Fast seek time 30ms/channel
- Stereo noise reduction
- Audio sensitivity 3dBμVemf (SINAD=26dB)
- Audio SINAD ≥ 60dB
- Anti-jamming
- Supports short antenna

1.2.3 GPS

- RF supports GPS, GALILEO, GLONASS and BEIDOU.

This document contains information that is proprietary to MediaTek Inc.
Unauthorized reproduction or disclosure of this information in whole or in part is strictly prohibited.

- Built-in calibrations for PVT variation
- Typical Rx tracking sensitivity of -163dBm.
- Supports external LNA
- Multi-mode filters for different GNSS receiver modes

1.2.4 IPD

WBT IPD

- Integrated matching network and balun
- Supports single, dual, and triple antenna operation
- Support cellular co-existence with external filter

GPS IPD

- Integrated matching network and filtering notch for cellular co-existence
- Fully integrated in one IPD die
- Supports single and dual antenna operation

This document contains information that is proprietary to MediaTek Inc.
Unauthorized reproduction or disclosure of this information in whole or in part is strictly prohibited.

2 Pin Definitions

2.1 IO Definitions

The IO definitions used in **Error! Reference source not found.** are listed below.

Table 2-1. I/O definitions used in*Error! Reference source not found.*

Pad attribute	
AI	Analog input (excluding pad circuitry)
AO	Analog output (excluding pad circuitry)
AIO	Analog bidirectional (excluding pad circuitry)
DIO	Bidirectional digital with CMOS input
DI	Digital input (CMOS)
DO	Digital output (CMOS)
Z	High-impedance (high-Z) output
NP	No internal pull
PU	Internal pull-high
PD	Internal pull-low
ADIO	Analog and digital IO (excluding pad circuitry)

2.2 Pin Definitions

Details pin descriptions of MT6625L are listed in **Error! Reference source not found.**-2.

Table 2-2. MT6625L pin definitions

		Catogories	PAD type	Descriptions
1	AVDD28_FSOURCE	2.8V Supply	AI	e-fuse 2.8V supply voltage. Connected to ground in normal operation.
2	HRST_B	Digital Control	DI	Hardware reset from companion modem.
3	FM_DBG	Digital Control	DO	FM debugging
4	F2W_DATA	Digital Control	DO	FM output data
5	F2W_CLK	Digital Control	DO	FM output clock
6	SCLK	Digital Control	DI	Enables 3-wire, clock and data connected to companion modem.
7	SDATA	Digital Control	DI	
8	SEN	Digital Control	DI	
9	CEXT	Analog IO	AIO	External cap for MT6625L always-on LDO
10	XO_IN	Analog IO	AI	Reference clock (26MHz) input for MT6625L
11	GPS_RX_QN	Analog IQ	AO	GPS receiver IF IQ signals. Connected

 © 2014 - 2015 MediaTek Inc.
This document contains information that is proprietary to MediaTek Inc.
Unauthorized reproduction or disclosure of this information in whole or in part is strictly prohibited.

		Catogories	PAD type	Descriptions
12	GPS_RX_QP	Analog IQ	AO	to companion modem.
13	GPS_RX_IN	Analog IQ	AO	
14	GPS_RX_IP	Analog IQ	AO	
15	WB_TX_QN	Analog IQ	AI	Wi-Fi and bluetooth IF transmitter IQ signals. Connected to companion modem.
16	WB_TX_QP	Analog IQ	AI	
17	WB_TX_IN	Analog IQ	AI	
18	WB_TX_IP	Analog IQ	AI	
19	WB_RX_QN	Analog IQ	AO	Wi-Fi and bluetooth IF receiver IQ signals. Connected to companion modem.
20	WB_RX_QP	Analog IQ	AO	
21	WB_RX_IN	Analog IQ	AO	
22	WB_RX_IP	Analog IQ	AO	
23	WB_CTRL0	Digital Control	DIO	Wi-Fi and bluetooth dedicated high speed control bus.
24	WB_CTRL1	Digital Control	DIO	
25	WB_CTRL2	Digital Control	DIO	
26	WB_CTRL3	Digital Control	DIO	
27	WB_CTRL4	Digital Control	DIO	
28	WB_CTRL5	Digital Control	ADIO	Selects Wi-Fi and bluetooth mode. Connected to companion modem.
29	AVDD18_WBT	1.8V Supply	AI	1.8V supply of Wi-Fi and Bluetooth radio
30	NC	RF IO	AI	Reserved
31	RF2G **(MT6625L)**	RF IO	AIO	2.4GHz WiFI / BT RF IO.
32	NC	RF IO	AIO	Reserved (MT6627: 1.6GHz diplexer output)
33	AVDD33_WBT	3.3V Supply	AI	Wi-Fi 3.3V supply for PA and Tx modulator
34	RF5G **(MT6625L)**	RF IO	AIO	5G WiFi RF IO.
35	NC	RF IO	AIO	Reserved
36	AVDD28_FM	2.8V Supply	AI	FM 2.8V supply. If the external TCXO is used as reference source, AVDD28_FM will also serve as its supply voltage.
37	FM_LANT_N	RF IO	AI	FM differential RF input, negative terminal.
38	FM_LANT_P	RF IO	AI	FM differential RF input, positive terminal.
39	GPS_RFIN	RF IO	AI	GPS RF input, single-ended
40	AVDD18_GPS	1.8V Supply	AI	1.8V supply to GPS IP; always on LDO for MT6625L top logic control.

© 2014 - 2015 MediaTek Inc.

This document contains information that is proprietary to MediaTek Inc.
Unauthorized reproduction or disclosure of this information in whole or in part is strictly prohibited.

3 Electrical Characteristics

3.1 Absolute Maximum Ratings

Table 3-1. Absolute maximum ratings

Symbol	Parameter	Rating	Unit
AVDD33_WBT	Wi-Fi 3.3V supply for PA and Tx modulator	-0.3 to 3.6	V
AVDD28_FM	FM 2.8V supply. If the external VCTCXO is used as reference source, AVDD28_FM will also serve as its supply voltage.	-0.3 to 3.6	V
AVDD18_GPS	1.8V supply to GPS IP; always on LDO for MT6625L top logic control	-0.3 to 3.6	V
AVDD18_WBT	1.8V supply of Wi-FI and Bluetooth radio	-0.3 to 3.6	V
T_{STG}	Storage temperature	-60 to +120	°C
T_A	Operating temperature	-40 to +85	°C

3.2 Recommended Operating Range

Table 3-2. Recommended operating range

Symbol	Parameter	Min.	Typ.	Max.	Unit
AVDD33_WBT	Wi-Fi 3.3V supply for PA and Tx modulator	3.0	3.3	3.6	V
AVDD28_FM	FM 2.8V supply. If the external VCTCXO is used as reference source, AVDD28_FM will also serve as its supply voltage.	2.5	2.8	3.1	V
AVDD18_GPS	1.8V supply to GPS IP; always on LDO for MT6625L top logic control.	1.62	1.8	1.98	V
AVDD18_WBT	1.8V supply of Wi-Fi and Bluetooth radio	1.62	1.8	1.98	V
T_j	Commercial junction operating temperature	0	25	115	°C
	Industry junction operating temperature	-20	25	125	°C
T_a	Operation temperature	-40	25	85	°C
T_{stg}	Storage temperature	-60	25	150	°C

3.3 Power Consumption and Supply Specifications

The following tables list the power supply requirements for AVDD18_WBT/AVDD18_GPS, AVDD28_FM and AVDD33_WBT.

Table 3-3. AVDD18 specifications

Test item	Min.	Typ.	Max.	Unit	Notes
Output voltage, VDD	1.62	1.8	1.98	V	
Output current	120			mA	

This document contains information that is proprietary to MediaTek Inc.
Unauthorized reproduction or disclosure of this information in whole or in part is strictly prohibited.

Test item	Min.	Typ.	Max.	Unit	Notes
Output noise			550	nV/sqrt(Hz)	
PSRR	40			dB	< 1MHz
Load transient	-200		200	mV	Transient slew rate 100mA/us
Turn-on rising time	180		240	usec	10% -->90% output voltage
Power-off settling time		2	4	ms	90% -->10% output voltage

Table 3-4. AVDD28 specifications

Test item	Min.	Typ.	Max.	Unit	Notes
Output voltage	2.5	2.8	3.1	V	
Output current	30			mA	
PSRR	40			dB	< 1MHz
Load transient	-150		150	mV	Transient slew rate 15mA/us
Turn-on rising time	180		240	usec	10% -->90% output voltage
Turn-on overshoot			10	%	

Table 3-5. AVDD33 specifications

Test Item	Min	Typ	Max	Unit	Notes
Output voltage	3.0	3.3	3.6	V	
Output current	350			mA	
Output noise			550	nV/sqrt(Hz)	
PSRR	40			dB	< 1MHz
Load transient	-200		200	mV	Transient slew rate 100mA/us
Turn-on rising time	180		240	usec	10% -->90% output voltage
Turn-on overshoot			10	%	
Power-off settling time		2	4	ms	90% -->10% output voltage

3.4 Power-on/off Sequence

MT6625L uses three supply voltages, 1.8V, 2.8V and 3.3V. Specific power-on/off sequence must be followed as described below.

1.8V

IO and internal control logic use 1.8V, and this supply voltage needs to be powered on prior to 2.8V and 3.3V for functioning properly. The functionality of MT6625L will not be guaranteed if 2.8V or 3.3V power is supplied prior to this 1.8V supply.

2.8V and 3.3V

This document contains information that is proprietary to MediaTek Inc.
Unauthorized reproduction or disclosure of this information in whole or in part is strictly prohibited.

There is no specific power-on/off timing relationship between 2.8V (used by FM radio and external oscillator, if used) and 3.3V (Wi-Fi).

3.5 Digital Logic Characteristics

MT6625L timing characteristics and interface protocols are shown here, including some general comments.

3.5.1 Timing Diagram Convention

Figure 3-1 shows the conventions used with timing diagram throughout this document.

Waveform	Description
	Signal is changing from low to high
	Signal is changing from high to low
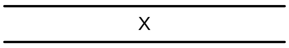	Don’t care or bus is driven
	Bus is changing from invalid to valid
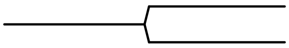	Bus is changing from high-Z to valid
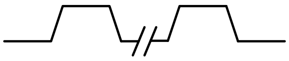	Denotes multiple clock periods

Figure 3-1. Timing diagram conventions

3.5.2 Rising/Falling Time Definition

Figure 3-2 shows the rising and falling timing diagram. The actual signal timing curve is related to the external load conditions. The operating conditions of digital logics can be seen in Table 3-6

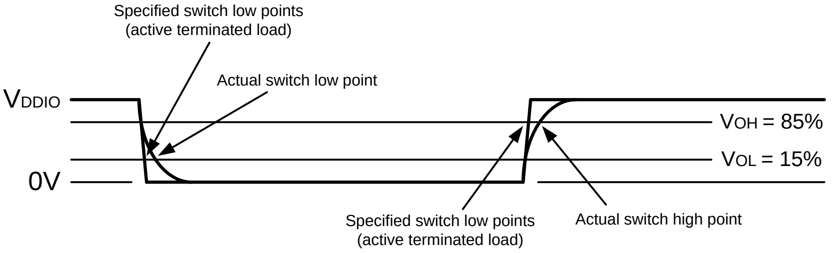

Figure 3-2. Rising and falling times diagram

© 2014 - 2015 MediaTek Inc.

This document contains information that is proprietary to MediaTek Inc.
Unauthorized reproduction or disclosure of this information in whole or in part is strictly prohibited.

Table 3-6. Operating Conditions of Digital Logics

Parameter	Min.	Typ.	Max.	Unit	Notes
VDD, supply of core power	1.08	1.2	1.32	V	
VDDIO,supply of IO Power	1.62	1.8	1.98	V	
V_{IH}, Input logic high voltage	0.75*VDDIO		VDDIO+0.3	V	
V_{IL}, Input logic low voltage	–0.3		0.25*VDDIO	V	
V_{OH}(DC), DC output high voltage	0.85*VDDIO			V	VDD=min, I_{OH}=1.5mA
V_{OL}(DC), DC output low voltage			0.15*VDDIO	V	VDD=min, I_{OL}=1.5mA

3.5.3 Protocals

There are 3 main interfaces for MT6625L.

- 3-wire SPI: Generally used for all systems (BT/Wi-Fi/FM/GPS)
- 6-wire bus: High-speed interface, especially for BT and Wi-Fi
- FM 2-wire: Utilized as a simplified interface modified from I2S. This interface also defines MT6625L strap-pin modes. Do not add pull-up/pull-down to this interface. Failing to follow this recommendation will lead to unexpected MT6625L operation.

3.5.3.1 3-Wire

The 3-wire SPI protocol of MT6625L is the main interface to access Wi-Fi/BT/FM/GPS/efuse command registers. The bit number of SDATA depends on different operating conditions, as shown in Figure 3-3.

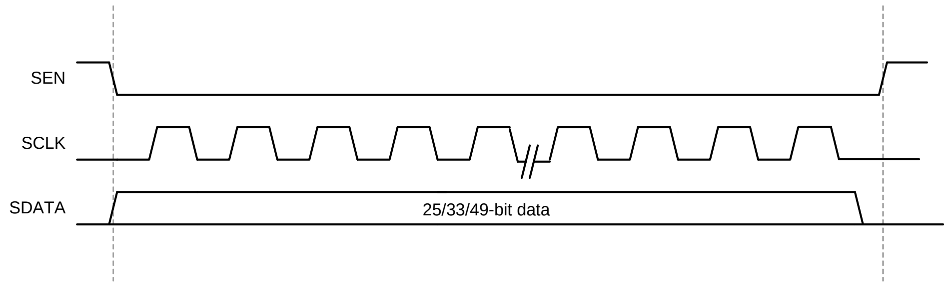

Figure 3-3. 3-wire SPI timing diagram

3.5.3.2 6-bit Bus

MT6625L has a dedicated 6-bit bus to control Wi-Fi and BT radios. The related control definitions depend on operating modes and conditions. One example BT operation scenario is shown in Figure 3-4.

 © 2014 - 2015 MediaTek Inc.
This document contains information that is proprietary to MediaTek Inc.
Unauthorized reproduction or disclosure of this information in whole or in part is strictly prohibited.

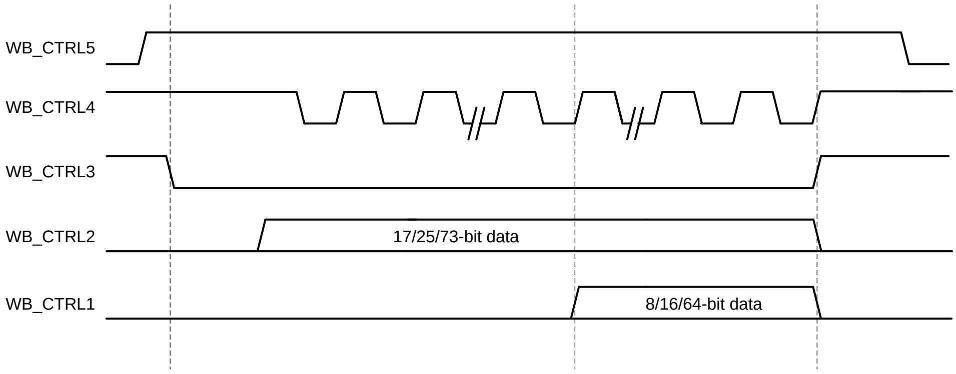

Figure 3-4. BT 5-wire SPI access

3.5.3.3 FM 2-wire Bus

A modified 2-wire interface instead of standard I2S protocol for FM audio data stream is used in MT6625L, as shown in Figure 3-5.

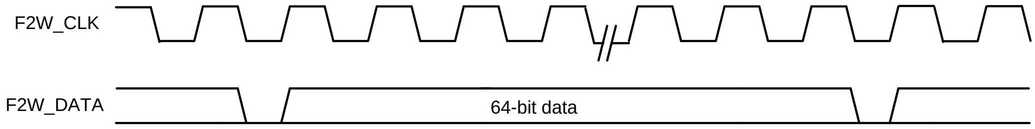

Figure 3-5. FM 2-wire interface

3.6 MT6625L TOP Building Blocks

3.6.1 Reference Clock

The reference clock source needs to satisify 0.8 Vpp with rising/falling time of 5 nsec and phase noise of －149 dBc/Hz at 100-kHz offset frequency. The clock buffers draw 90 μA. The first stage buffer employs ac-coupled architecture to ensure proper amplification even with weak input clock whose swing is less than thresh voltage of transistors. There is a tie-low switch in the buffer to each block (i.e. WBT, GPS, FM, THADC and DIG) to guarantee well-defined voltage for input ports of blocks mentioned above.

3.6.2 Thermal ADC

A low-speed ADC converts the output of thermal sensor to 8-cycle-average or 16-cycle-average ADC code which represents the current chip temperature near the THADC. The temperature coverage range is between -40 and 120 degree Celsius. The chip top control may do corresponding adjustment (such as PA/TX gain switching) based on such temperature information.

This document contains information that is proprietary to MediaTek Inc.
Unauthorized reproduction or disclosure of this information in whole or in part is strictly prohibited.

3.6.3 Always-on LDO

A low-power bandgap reference provides biasing currents for internal LDO as well as reference voltages for THADC’s temperature sensing. An always-on LDO provides an internal 1.2V voltage to digital circuits from an external supply of 1.8V. In normal operation, the BG circuit generates the reference voltage for the LDO. In sleep mode, the BG+LDO consumes a small quiescent current of ~25uA. The LDO output voltage and driving capability are programmable.

3.7 Wi-Fi/BT

MT6625L Wi-Fi/BT is a high performance and highly-integrated dual-band RF transceiver fully compliant with IEEE 802.11 a/b/g/n and Bluetooth v2.1+EDR/v3.0+HS/v4.1 LE standards. A novel RF front-end topology is implemented to achieve maximum hardware sharing between 2.4GHz/5GHz Wi-Fi and Bluetooth with integrated TR-switches. MT6625L also features a self calibration scheme to compensate the process and temperature variation to maintain high performance. The calibration is performed automatically right after the system boot-up.

3.7.1 Wi-Fi/BT Specifications

The WLAN/BT radio characteristics are described in this section. Unless otherwise specified, all specifications are measured at the RF port which is depicted in the following figure. Unlike most devices available today which requires matching network or filters between antenna port and RF ports (defined in Figure 3-), due to the integration of integrated passive device (IPD), the RF port and antenna port of MT6625L can be directly connected by a 50Ohm trace.

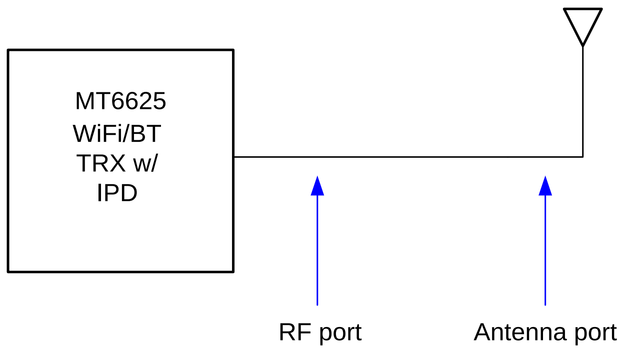

Figure 3-6. Wi-Fi/BT spec. measurement diagram

3.7.1.1 2.4GHz Wi-Fi Receiver Specifications

Note:

(1) The specification value is valid at room temperature (25°C).

(2) All specifications are measured at the RF port unless otherwise specified.

This document contains information that is proprietary to MediaTek Inc.
Unauthorized reproduction or disclosure of this information in whole or in part is strictly prohibited.

(3) System performance will depend on the companion modem chip's capability.

Table 3-7. 2.4GHz receiver specifications

Parameter	Description	Min.	Typ.	Max.	Unit
Frequency range		2,412	-	2,484	MHz
Rx sensitivity	1 Mbps DSSS		-98		dBm
	2 Mbps DSSS		-94.5		dBm
	5.5 Mbps DSSS		-92		dBm
	11 Mbps DSSS		-89.5		dBm
Rx sensitivity	6 Mbps OFDM		-93.5		dBm
	9 Mbps OFDM		-91.5		dBm
	12 Mbps OFDM		-90.5		dBm
	18 Mbps OFDM		-88		dBm
	24 Mbps OFDM		-85		dBm
	36 Mbps OFDM		-81		dBm
	48 Mbps OFDM		-77.5		dBm
	54 Mbps OFDM		-76.5		dBm
Rx sensitivity BW = 20MHz Green field 800nS guard interval Non-STBC	MCS 0		-93		dBm
	MCS 1		-89.5		dBm
	MCS 2		-87.5		dBm
	MCS 3		-84.5		dBm
	MCS 4		-81.5		dBm
	MCS 5		-77		dBm
	MCS 6		-75.5		dBm
	MCS 7		-74		dBm
Rx sensitivity BW = 40MHz Green field 800nS guard interval Non-STBC	MCS 0		-90		dBm
	MCS 1		-86.5		dBm
	MCS 2		-84.5		dBm
	MCS 3		-81.5		dBm
	MCS 4		-78.5		dBm
	MCS 5		-74		dBm
	MCS 6		-72.5		dBm
	MCS 7		-70.5		dBm
Maximum receive level	11 Mbps DSSS			-5.5	dBm
	6 Mbps OFDM			-10.5	dBm
	54 Mbps OFDM			-10.5	dBm
	MCS0			-10.5	dBm
	MCS7			-10.5	dBm
Adjacent channel	1 Mbps DSSS			41.5	dB

© 2014 - 2015 MediaTek Inc.

This document contains information that is proprietary to MediaTek Inc.
Unauthorized reproduction or disclosure of this information in whole or in part is strictly prohibited.

Parameter	Description	Min.	Typ.	Max.	Unit
rejection (30MHz offset)					
Adjacent channel rejection (25MHz offset)	11 Mbps DSSS			41.5	dB
Adjacent channel rejection (25MHz offset)	6 Mbps OFDM			38.5	dB
	54 Mbps OFDM			26.5	dB
Adjacent channel rejection (25MHz offset), BW = 20MHz	MCS 0			34.5	dB
	MCS 7			10.5	dB
Adjacent channel rejection (40MHz offset), BW = 40MHz	MCS 0			26.5	dB
	MCS 7			4.5	dB

3.7.1.2 2.4GHz Wi-Fi Transmitter Specifications

Note:

(1) The specification value is valid at room temperature (25°C).

(2) All specifications are measured at the RF port unless otherwise specified.

(3) System performance will depend on the companion modem chip's capability.

Table 3-8. 2.4GHz transmitter specifications

Parameter	Description	Min.	Typ.	Max.	Unit
Frequency range		2,412	-	2,484	MHz
Output power VBAT = 3.6V	802.11b, 1~11 Mbps DSSS		20		dBm
	802.11g, 6 ~54Mbps OFDM		17.5		dBm
	802.11n, HT20 MCS0~4		18		dBm
	802.11n, HT20 MCS7		17		dBm
	802.11n, HT40 MCS7		16		dBm
EVM	802.11b, 1~11 Mbps DSSS @Pout= 18dBm		25		%
	802.11g, 6 ~54Mbps OFDM @Pout=15.5dBm		-31		dB
	802.11n, HT20 MCS0~7 @Pout= 15dBm		-31		dB
	802.11n, HT40 MCS0~7 @Pout= 14dBm		-31		dB
Tx power accuracy	-40~85°C,2~18dBm			±1.5	dB
Transmitted power (Data rate = 1M, Pout = 20dBm)	76 ~ 108MHz			-146.5	dBm/Hz
	776 ~ 794MHz			-145.5	dBm/Hz
	869 ~ 960MHz			-146.5	dBm/Hz

© 2014 - 2015 MediaTek Inc.

This document contains information that is proprietary to MediaTek Inc.
Unauthorized reproduction or disclosure of this information in whole or in part is strictly prohibited.

Parameter	Description	Min.	Typ.	Max.	Unit
	925 ~ 960MHz			-146.5	dBm/Hz
	1,570 ~ 1,580MHz			-146.5	dBm/Hz
	1,805 ~ 1,880MHz			-145.5	dBm/Hz
	1,930 ~ 1,990MHz			-143.5	dBm/Hz
	2,110 ~ 2,170MHz			-136.5	dBm/Hz
Harmonic output power (Data rate = 1M, Pout = 20dBm)	2nd harmonic			-21	dBm/MHz
	3rd harmonic			-28	dBm/MHz

3.7.1.3 5GHz Wi-Fi Receiver Specifications

Note:

(1) The specification value is valid at room temperature (25°C).

(2) All specifications are measured at the RF port unless otherwise specified.

(3) System performance will depend on the companion modem chip's capability.

Table 3-9. 5GHz receiver specifications

Parameter	Description	Min.	Typ.	Max.	Unit
Frequency range		4,915	-	5,925	MHz
Rx sensitivity	6 Mbps OFDM		-93.5		dBm
	9 Mbps OFDM		-92		dBm
	12 Mbps OFDM		-91		dBm
	18 Mbps OFDM		-88.5		dBm
	24 Mbps OFDM		-85.5		dBm
	36 Mbps OFDM		-81.5		dBm
	48 Mbps OFDM		-78		dBm
	54 Mbps OFDM		-76.5		dBm
Rx sensitivity BW = 20MHz Green field 800nS guard interval Non-STBC	MCS 0		-93.5		dBm
	MCS 1		-90		dBm
	MCS 2		-88		dBm
	MCS 3		-85		dBm
	MCS 4		-82		dBm
	MCS 5		-77.5		dBm
	MCS 6		-76		dBm
	MCS 7		-74.5		dBm
Rx sensitivity BW = 40MHz Green field 800nS guard interval	MCS 0		-90.5		dBm
	MCS 1		-87		dBm
	MCS 2		-85		dBm
	MCS 3		-82		dBm

© 2014 - 2015 MediaTek Inc.

This document contains information that is proprietary to MediaTek Inc.
Unauthorized reproduction or disclosure of this information in whole or in part is strictly prohibited.

Parameter	Description	Min.	Typ.	Max.	Unit
Non-STBC	MCS 4		-79		dBm
	MCS 5		-74.5		dBm
	MCS 6		-73		dBm
	MCS 7		-71		dBm
Maximum receive level	6 Mbps OFDM		-11		dBm
	54 Mbps OFDM		-16		dBm
	MCS0		-16		dBm
	MCS7		-16		dBm
Adjacent channel rejection (25MHz offset)	6 Mbps OFDM			24	dB
	54 Mbps OFDM			6	dB
Adjacent channel rejection (25MHz offset), BW = 20MHz	MCS 0			23	dB
	MCS 7			0	dB
Adjacent channel rejection (40MHz offset), BW = 40MHz	MCS 0			23	dB
	MCS 7			2	dB

3.7.1.4 5GHz Wi-Fi Transmitter Specifications

Note:

(1) The specification value is valid at room temperature (25°C).

(2) All specifications are measured at the RF port unless otherwise specified.

(3) System performance will depend on the companion modem chip's capability.

Table 3-10. 5GHz transmitter specifications

Parameter	Description	Min.	Typ.	Max.	Unit
Frequency range		4,900	-	5,950	MHz
Output power VBAT = 3.6V	802.11a, 6 ~54Mbps OFDM		17		dBm
	802.11n, HT20 MCS7		16		dBm
	802.11n, HT40 MCS7		16		dBm
EVM	802.11g, 6 ~54Mbps OFDM @Pout= 15dBm		-31		dB
	802.11n, HT20 MCS0~7 @Pout= 14dBm		-31		dB
	802.11n, HT40 MCS0~7 @Pout=14dBm		-31		dB
Tx power accuracy	-40~85°C,2~18dBm			±1.5	dB
Transmitted power (Data rate = 54M, Pout = 17dBm)	76 ~ 108MHz			-149	dBm/Hz
	776 ~ 794MHz			-149	dBm/Hz
	869 ~ 960MHz			-149	dBm/Hz

This document contains information that is proprietary to MediaTek Inc.
Unauthorized reproduction or disclosure of this information in whole or in part is strictly prohibited.

Parameter	Description	Min.	Typ.	Max.	Unit
	925 ~ 960MHz			-149	dBm/Hz
	1,570 ~ 1,580MHz			-149	dBm/Hz
	1,805 ~ 1,880MHz			-149	dBm/Hz
	1,930 ~ 1,990MHz			-149	dBm/Hz
	2,110 ~ 2,170MHz			-149	dBm/Hz
Harmonic output power (Data rate = 6M, Pout = 17dBm)	2nd harmonic			-16	dBm/MHz
	3rd harmonic			-22	dBm/MHz

3.7.1.5 Bluetooth BDR Receiver Specifications

Note:

(1) The specification value is valid at room temperature (25°C).

(2) All specifications are measured at the RF port unless otherwise specified.

(3) System performance will depend on the companion modem chip's capability.

Table 3-11. Basic data rate receiver specifications

Parameter	Description	Min.	Typ.	Max.	Unit
Frequency range		2,402		2,480	MHz
Receiver sensitivity	BER < 0.1%		-94		dBm
Max. usable signal	BER < 0.1%	-20	-1.5		dBm
C/I co-channel	Co-channel selectivity (BER < 0.1%)	-	2.5	11	dB
C/I 1MHz	Adjacent channel selectivity (BER < 0.1%)	-	-14.5	0	dB
C/I 2MHz	2nd adjacent channel selectivity (BER < 0.1%)	-	-40.5	-30	dB
C/I ≧3MHz	3rd adjacent channel selectivity (BER < 0.1%)	-	-45.5	-40	dB
C/I image channel	Image channel selectivity (BER < 0.1%)	-	-30.5	-9	dB
C/I image 1MHz	1MHz adjacent to image channel selectivity (BER < 0.1%)	-	-47.5	-20	dB
Out-of-band blocking	30MHz to 2,000MHz	-10			dBm
	2,001MHz to 2,339MHz	-27			dBm
	2,501MHz to 3,000MHz	-27			dBm
	3,001MHz to 12.75GHz	-10			dBm
Intermodulation	Max. interference level to maintain 0.1% BER	-39	-26.5		dBm

This document contains information that is proprietary to MediaTek Inc.
Unauthorized reproduction or disclosure of this information in whole or in part is strictly prohibited.

3.7.1.6 Bluetooth BDR Transmitter Specifications

Note:

(1) The specification value is valid at room temperature (25°C).

(2) All specifications are measured at the RF port unless otherwise specified.

(3) System performance will depend on the companion modem chip's capability.

Table 3-12. Basic data rate transmitter specifications

Parameter	Description	Min.	Typ.	Max.	Unit
Frequency range		2,402	-	2,480	MHz
Output power	At max. power output level		8		dBm
Power control step		2	4	8	dB
ICFT	Initial carrier frequency drift	-75	5	75	kHz
Carrier frequency drift	One slot packet (DH1)	-	6	25	kHz
	Three slot packet (DH3)	-	6	40	kHz
	Five slot packet (DH5)	-	6	40	kHz
	Max. drift rate	-	180	400	Hz/us
Modulation characteristic	$\triangle f1_{avg}$	140	156	175	kHz
	$\triangle f2_{max}$ (for at least 99% of all $\triangle f2_{max}$)	115	150	-	kHz
	$\triangle f2_{avg}/\triangle f1_{avg}$	0.8	0.98	-	
20-dB bandwidth		-	922	1,000	kHz
In-band spurious emission	±2MHz offset		-44.5	-20	dBm
	±3MHz offset		-46.5	-40	dBm
	>±3MHz offset		-43.5	-40	dBm
Out-of-band spurious emission	30MHz to 1GHz			-36	dBm
	1GHz to 12.75GHz			-30	dBm
	1.8GHz to 1.9GHz			-47	dBm
	5.15 to 5.3GHz			-47	dBm

3.7.1.7 Bluetooth EDR Receiver Specifications

Note:

(1) The specification value is valid at room temperature (25°C).

(2) All specifications are measured at the RF port unless otherwise specified.

(3) System performance will depend on the companion modem chip's capability.

Table 3-13. Enhanced data rate receiver specifications

Parameter	Description	Min.	Typ.	Max.	Unit
Frequency range		2,402	-	2,480	MHz

This document contains information that is proprietary to MediaTek Inc.
Unauthorized reproduction or disclosure of this information in whole or in part is strictly prohibited.

Parameter	Description	Min.	Typ.	Max.	Unit
Receiver sensitivity	π/4 DQPSK (BER < 0.01%)	-	-93	-70	dBm
	8PSK (BER < 0.01%)	-	-87.5	-70	dBm
Max. usable signal	π/4 DQPSK (BER < 0.1%)	-20	-4.5	-	dBm
	8PSK (BER < 0.1%)	-20	-4.5	-	dBm
C/I co-channel	π/4 DQPSK (BER < 0.1%)	-	6.5	13	dB
	8PSK (BER < 0.1%)	-	12.5	21	dB
C/I 1MHz	π/4 DQPSK (BER < 0.1%)	-	-13.5	0	dB
	8PSK (BER < 0.1%)	-	-8.5	5	dB
C/I 2MHz	π/4 DQPSK (BER < 0.1%)	-	-37.5	-30	dB
	8PSK (BER < 0.1%)	-	-34.5	-25	dB
C/I ≧3MHz	π/4 DQPSK (BER < 0.1%)	-	-45.5	-40	dB
	8PSK (BER < 0.1%)	-	-44.5	-33	dB
C/I image channel	π/4 DQPSK (BER < 0.1%)	-	-31.5	-7	dB
	8PSK (BER < 0.1%)	-	-26.5	0	dB
C/I image 1MHz	π/4 DQPSK (BER < 0.1%)	-	-48.5	-20	dB
	8PSK (BER < 0.1%)	-	-42.5	-13	dB

3.7.1.8 Bluetooth EDR Transmitter Specifications

Note:

(1) The specification value is valid at room temperature (25˚C).

(2) All specifications are measured at the RF port unless otherwise specified.

(3) System performance will depend on the companion modem chip's capability.

Table 3-14. Enhanced data rate transmitter specifications

Parameter	Description	Min.	Typ.	Max.	Unit
Frequency range		2,402		2,480	MHz
Output power	π/4 DQPSK		5.5		dBm
	8PSK		5.5		dBm
Relative transmit power	π/4 DQPSK	-4	-1.5	1	dB
	8PSK	-4	-1.5	1	dB

© 2014 - 2015 MediaTek Inc.

This document contains information that is proprietary to MediaTek Inc.
Unauthorized reproduction or disclosure of this information in whole or in part is strictly prohibited.

Parameter	Description		Min.	Typ.	Max.	Unit
Frequency stability	ω_0	π/4 DQPSK	-10	3	10	kHz
		8PSK	-10	3	10	kHz
	ω_i	π/4 DQPSK	-75	3	75	kHz
		8PSK	-75	3	75	kHz
	$\lvert\omega_0+\omega_i\rvert$	π/4 DQPSK	-75	4	75	kHz
		8PSK	-75	4	75	kHz
Modulation accuracy	RMS DEVM	π/4 DQPSK	-	4	20	%
		8PSK	-	4	13	%
	99% DEVM	π/4 DQPSK	-	8	30	%
		8PSK	-	8	20	%
	Peak DEVM	π/4 DQPSK	-	9	35	%
		8PSK	-	13	25	%
In-band spurious emission	±1MHz offset	π/4 DQPSK		-30.5	-26	dB
		8PSK		-28.5	-26	dB
	±2MHz offset	π/4 DQPSK		-26.5	-20	dBm
		8PSK		-26.5	-20	dBm
	±3MHz offset	π/4 DQPSK		-40.5	-40	dBm
		8PSK		-40.5	-40	dBm

3.7.1.9 Bluetooth LE Receiver Specifications

Note:

(1) The specification value is valid at room temperature (25°C).

(2) All specifications are measured at the RF port unless otherwise specified.

(3) System performance will depend on the companion modem chip's capability.

Table 3-15. Bluetooth LE receiver specifications

Parameter	Description	Min.	Typ.	Max.	Unit
Frequency range		2,402		2,480	MHz
Receiver sensitivity (*)	PER < 30.8%		-97	-70	dBm
Max. usable signal	PER < 30.8%	-10	-5.5		dBm
C/I co-channel	Co-channel selectivity (PER < 30.8%)		2.5	21	dB
C/I 1MHz	Adjacent channel selectivity (PER < 30.8%)		-13.5	15	dB
C/I 2MHz	2nd adjacent channel selectivity (PER < 30.8%)		-31.5	-17	dB
C/I ≧3MHz	3rd adjacent channel		-34.5	-27	dB

This document contains information that is proprietary to MediaTek Inc.
Unauthorized reproduction or disclosure of this information in whole or in part is strictly prohibited.

Parameter	Description	Min.	Typ.	Max.	Unit
	selectivity (PER < 30.8%)				
C/I Image channel	Image channel selectivity (PER < 30.8%)		-26.5	-9	dB
C/I Image 1MHz	1MHz adjacent to image channel selectivity (PER < 30.8%)		-36.5	-15	dB
Out-of-band blocking	30MHz to 2,000MHz			-30	dBm
	2,001MHz to 2,339MHz			-35	dBm
	2,501MHz to 3,000MHz			-35	dBm
	3,001MHz to 12.75GHz			-30	dBm

3.7.1.10 Bluetooth LE Transmitter Specifications

Note:

(1) The specification value is valid at room temperature (25°C).

(2) All specifications are measured at the RF port unless otherwise specified.

(3) System performance will depend on the companion modem chip's capability.

Table 3-16. Bluetooth LE transmitter specifications

Parameter	Description	Min.	Typ.	Max.	Unit
Frequency range		2,402	-	2,480	MHz
Output power(*)	Power output level	-20	1.5	6	dBm
Carrier frequency offset and drift	Frequency offset	-150	-2	150	kHz
	Frequency drift	-50	2	50	kHz
	Max. drift rate	-20	3	20	Hz/us
Modulation characteristic	$\triangle f1_{avg}$	225	251	275	kHz
	$\triangle f2_{max}$ (For at least 99% of all $\triangle f2_{max}$)	185	215		kHz
	$\triangle f2_{avg}/\triangle f1_{avg}$	0.8	0.88		
In-band spurious emission	±2M offset		-48.5	-20	dBm
	>±3MHz offset		-52.5	-30	dBm

(*): Depends upon companion chip control setting

3.7.2 2.4GHz Wi-Fi/BT Tx

The circuits in the Tx path of MT6625L are shared between Wi-Fi and Bluetooth to achieve minimum area. The data are digitally modulated in the baseband processor from the companion chip, then up-converted to 2.4GHz RF channels through the DA converter, filter, IQ up-converter and power

This document contains information that is proprietary to MediaTek Inc.
Unauthorized reproduction or disclosure of this information in whole or in part is strictly prohibited.

amplifier. The power amplifier is capable of transmitting 20dBm CCK power and 8dBm BDR power for Bluetooth class 1 operation.

3.7.3 2.4GHz Wi-Fi/BT Rx

For Bluetooth, MT6625L uses a low IF receiver architecture. An image-rejecting mixer down-converts the RF signal to the IF with the LO from the synthesizer, which supports different clock frequencies. The mixer output is then converted to digital signal, down-converted to baseband for demodulation. A fast AGC enables the effective discovery of device within the dynamic range of the receiver.

For Wi-Fi, a direct down-conversion receiver architecture is used, which includes a high linearity and low noise figure LNA, and a quadrature passive mixer and a bandwidth-programmable low-pass filter with DC offset cancellation embedded.

3.7.4 2.4GHz Wi-Fi/BT Sx

A fractional-N frequency synthesizer is implemented to support both Wi-Fi and Bluetooth LO signal. The frequency synthesizer is capable of supporting various crystal clock frequencies. VCO operates at 2.5 times of RF frequency to avoid any coupling with RF front-end circuitry. An LO generation is employed to divide the VCO signal by 2.5 and generate I/Q quadrature signals.

3.7.5 5GHz WiFi Tx

The 5G transmitter utilizes the most cost efficient direct up architecture and integrates a high performance PA with on-chip balun. The data are digitally modulated in the baseband processor from the companion baseband chip, then up-converted to 5GHz RF channels through the DA converter, low-pass filter, IQ up-converter and power amplifier. The power amplifier is capable of transmitting 17dBm OFDM power.

3.7.6 5GHz WiFi Rx

A direct down-conversion receiver architecture is also used in 5G WiFi Rx, which consists of a high linearity, low noise figure single-ended LNA with on-chip integrated T/R switch, a quadrature passive mixer and a bandwidth-programmable low-pass filter with DC offset cancellation embedded.

3.7.7 5GHz WiFi Sx

A-band Sx is an independent RF-PLL for a-band Wi-Fi RF use. It adopts 8/5xLO architecture while VCO frequency is RF frequency x 8/5 to avoid xX pulling. Thus, it is composed of PLL, offset LO mixer and a repeater. Its integrated PN from 100kHz to 10MHz is less than 0.45 degree to ensure good Tx low-power EVM. It supports multi-frequency XTAL frequency from 19.2MHz to 52MHz. Typical application is 26MHz reference clock input. In MT6625L application, typical Sx supply voltage

This document contains information that is proprietary to MediaTek Inc.
Unauthorized reproduction or disclosure of this information in whole or in part is strictly prohibited.

is 1.8V, and internal cap-less LDO regulates this 1.8V into 1.35V for core circuit operation. Sx output frequency is 2xLO frequency (~11GHz), and after IQ DIV2 of Tx and RX, it generates I/Q quadrature phase to TRX mixer.

3.8 FM

3.8.1 FM Radio Descriptions

FM radio subsystem integrates complete receiver supporting 65-108 MHz bands with 50kHz tuning step. MT6625L performs fast channel seek/scan algorithm to validate 206 carrier frequencies (87.5 ~ 108MHz) in 6 seconds. In addition to receiving FM audio broadcasting, the digital RDS/RBDS data system is supported as well. The integrated FM receiver utilizes state-of-the-art digital demodulation/modulation technique to achieve excellent performance.

In order to achieve high SINAD, good sensitivity and excellent noise suppression, the FM receiver adopts adaptive demodulation scheme to optimize the Rx system performance in all ranges of signal quality by referring to the Channel Quality Index (CQI). When receiving poor signals, MT6625L not only enhances the ACI rejection capability but also soft-mutes annoying noise to provide good perception quality.

The FM radio subsystem supports long antenna, which is usually in the earphone on the mobile device and short antenna, which is usually a FPC short antenna or shared antenna with GSM.

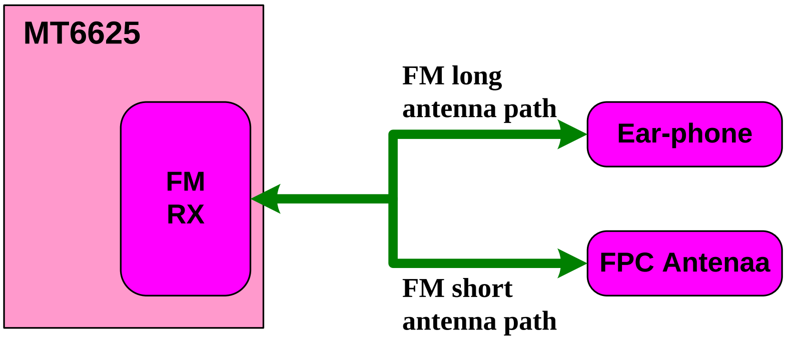

Figure 3-6. Long/short antenna application scenario

3.8.1.1 FM Specifications

Unless otherwise stated, all receiver characteristics are applicable to both long and short antenna ports when operated under the recommended operating conditions. Typical specifications are for channel 98MHz, default register settings and under recommended operating conditions. The min./max. specifications are for extreme operating voltage and temperature conditions, unless otherwise stated.

© 2014 - 2015 MediaTek Inc.

This document contains information that is proprietary to MediaTek Inc.
Unauthorized reproduction or disclosure of this information in whole or in part is strictly prohibited.

Note:

(1) The specification value is valid at room temperature (25°C).

(2) All specifications are measured at the RF port unless otherwise specified.

(3) System performance will depend on the companion modem chip's capability.

Table 3-17. FM specification.

Description	Condition	Min.	Typ.	Max.	Unit
Input frequency range		65		108	MHz
Sensitivity (long antenna)[1,3]	SINAD = 26dB, unmatched		3		dBμVemf
	SINAD = 26dB, matched		2		dBμVemf
RDS sensitivity (long antenna)	Δf = 2kHz, BLER < 5%, unmatched		18		dBμVemf
RDS sensitivity (short antenna)	Δf = 2kHz, BLER < 5%, unmatched		19		dBμVemf
LNA input resistance[4]	Antenna port		2.4k		Ohm
LNA input capacitance[4]	Antenna port		8		pF
AM suppression[1,4]	m = 0.3		60		dB
Adjacent channel selectivity[1,4]	±200kHz		53		dB
Alternate channel selectivity[1,4]	±400kHz		66		dB
Spurious response rejection[4]	In-band		55		dB
Maximum input level				130	dBμVemf
Audio mono SINAD[1,3,4]		56	60		dB
Audio stereo SINAD[2,3,4]		51	55		dB
Audio stereo separation[4]	Δf = 75kHz		45		dB
Audio output load resistance	Single-ended at AFR/AFL outputs		10k		Ohm
Audio output load capacitance	Single-ended at AFR/AFL outputs		12.5		pF
Audio output voltage[1,4]	At AFR/AFL outputs		80		mVrms
Audio output THD[1,4]			0.05	0.1	%
Audio output frequency range	3dB corner frequency	30		15k	Hz
[1] Δf = 22.5kHz, fm = 1kHz, mono, L = R					
[2] Δf = 22.5kHz, fm = 1kHz, 50□ s de-emphasis, stereo					
[3] A-weighting, BW = 300Hz to 15kHz					
[4] Vin = 60dBμVemf					
[5] Reference clock accuracy assumes ideal FM source. If the input FM source has less frequency error, it is recommended to use a reference clock of accuracy within ±100ppm so as not to affect					

This document contains information that is proprietary to MediaTek Inc.
Unauthorized reproduction or disclosure of this information in whole or in part is strictly prohibited.

Description	Condition	Min.	Typ.	Max.	Unit
the quality of channel scan.					

Description	Performance	
	Typ.	Unit
FM receive	13	mA

3.9 GPS

3.9.1 GPS Radio Descriptions

The GPS RF consists of a low-IF receiver and a fractional-N frequency synthesizer. GPS LO is set to 1571.42MHz resulting in an IF frequency of 4.0MHz, with the baseband filter configured as complex BPF. All RF/analog blocks operate under a 1.3V supply voltage. The radio architecture allows for configurations of GPS/Galileo-only, GPS/Galileo-Glonass or GPS/Galileo-Beidou modes, which are set by LO and baseband filter configurations. In the case of GPS/Galileo-only reception, LO (fLO_GPS) is set to 1571.328MHz resulting in an IF frequency of 4.092MHz, with the baseband filter configured as complex BPF. On the other hand, for simultaneous GPS/Galileo and Glonass dual reception, LO (fLO_GG) is set to 1588.608MHz. As a result, the GPS/Galileo signal becomes the image of the Glonass satellite signal with an IF frequency of 13.1MHz, and the baseband filter in this case is configured as real LPF. The Glonass signal is separated from the GPS/Galileo image signal in digital baseband. Similarly, with LO (fLO_GB) set to 1568.256MHz, the resulting IF frequency is about 7.1MHz for GPS/Galileo and Beidou dual reception. Only one synthesizer is needed to support this architecture. All RF/analog blocks operate under a 1.3V supply voltage.

3.9.1.1 GPS Mode Definition

GPS-only mode

The receiver sets LO to 1571.42MHz and IF filter to complex BPF with center frequency of 4MHz and bandwidth of 2MHz.

GPS/GALILEO mode

The receiver sets LO to 1571.42MHz and IF filter to complex BPF with center frequency of 4MHz and bandwidth of 4MHz.

GPS/GLONASS mode

The receiver sets LO to 1588.608MHz and IF filter to LPF with bandwidth of 15MHz.

GPS/BEIDOU mode

The receiver sets LO to 1568.256MHz and IF filter to LPF with bandwidth of 9MHz.

This document contains information that is proprietary to MediaTek Inc.
Unauthorized reproduction or disclosure of this information in whole or in part is strictly prohibited.

3.9.1.2 GPS Specifications

Note:

(1) The specification value is valid at room temperature (25°C).

(2) All specifications are measured at the RF port unless otherwise specified.

(3) System performance will depend on the companion modem chip's capability.

Table 3-18. GPS RF specifications for GPS/Galileo, GPS/GLONASS, GPS/Beido modes

GPS/Galileo mode

Parameter	Condition	Min.	Typ.	Max.	Unit
RF input frequency			1575.42		MHz
LO frequency	LO frequency is 4.092MHz lower than RF		1571.42		MHz
LO leakage	Measured at balun matching network input at LNA high gain		-70		dBm
Input return loss	Single-ended input and external matched to 50 source using balun matching network for all gain	-10			dB
Gain (Av) (Note 1)	High current mode with max. PGA gain	80	78	76	dB
	Low current mode with max. PGA gain			58	
PGA Gain range			24		dB
PGA Gain step			2		dB
Gain compression	Blocker -25dBm CW at 1710MHz, relative to uncompressed gain, max. PGA gain		1	2	dB
NF	High current mode with max. PGA gain		3		dB
ΔNF at Gain=62dB	Relative to NF at max. gain		0.5	1	dB
ΔNF at Gain=52dB	Relative to NF at max. gain		2	3	dB
NF under compression	Blocker -25dBm CW at 1710MHz, max. gain		9	12	dB
Input IP3, inband	Max. gain, 5M/10M offset@-60dBm	-33	-28		dBm
Input IP3, outband	Max. gain, ~2000M/2,400M@-40dBm	-13	-8		dBm
Input IP2, outband	Max. gain, ~800M/2,400M@-40dBm	+32	+37		dBm
Input P1 dB, inband	PGA gain=0dB, offset 500k	-56	-53		
Frequency response, relative to 4.092MHz, (GPS/Galileo)	At offset +-3MHz		-12/-6		
	At offset +-10MHz		-40/-34		
	At offset +-20MHz		-60/-54		
	At offset +-100MHz		-100/-94		
Gain ripple, GPS	4.092+-1MHz		1.0	1.5	dB

This document contains information that is proprietary to MediaTek Inc.
Unauthorized reproduction or disclosure of this information in whole or in part is strictly prohibited.

Parameter	Condition	Min.	Typ.	Max.	Unit
Gain ripple, Galileo	4.092+-2MHz		2.0	3.0	dB
Delay ripple, GPS	4.092+-1MHz		60	110	ns
Delay ripple, Galileo	4.092+-2MHz		40	70	ns
Image rejection	All mode		35		dB
DC offset			±50	±100	mV
RX Current	High current mode		7.2		mA

GPS/GLONASS mode

Parameter	Condition	Min.	Typ.	Max.	Unit
RF input frequency			1575.42		MHz
LO frequency			1588.608		MHz
LO leakage	Measured at balun matching network input at LNA high gain		-70		dBm
Input return loss	Differential input and external matched to 50 source using balun matching network for all gain	-10			dB
Gain (Av) (integrated average over Fc+-4M)	High current mode with max. PGA gain	80	76	70	dB
	Low current mode with max. PGA gain			52	
PGA Gain range			24		dB
PGA Gain step			2		dB
Gain compression	Blocker -25dBm CW at 1710MHz, relative to uncompressed gain, max. PGA gain		1	2	dB
NF (integrated average over Fc+-4M)	High current mode with max. PGA gain		3		dB
ΔNF at Gain=56dB	Relative to NF at max. gain		0.5	1	dB
ΔNF at Gain=46dB	Relative to NF at max. gain		2	3	dB
NF under compression	Blocker -25dBm CW at 1,710MHz, max. gain		7	10	dB
Input IP3, inband	Max. gain, +10M/+20M offset@-70dBm	-50	-45		dBm
Input IP3, outband	Max. gain, ~2,000M/2,400M@-40dBm	-15	-10		dBm
Input IP2, outband	Max. gain, ~800M/2,400M@-40dBm	+30	+35		dBm
Input P1 dB, inband	PGA gain=0dB, offset 500k	-58	-55		dBm
Frequency response (relative to 13.14M)	At 0~23MHz		3	4	dB
	At 33MHz		-25	-22	
	At 53MHz		-43	-40	
	At 120MHz		-66	-63	
	At 180MHz		-85	-82	
LPF 3 dB bandwidth	(recom. 4th order Butterworth		TBD		MHz

© 2014 - 2015 MediaTek Inc.

This document contains information that is proprietary to MediaTek Inc.
Unauthorized reproduction or disclosure of this information in whole or in part is strictly prohibited.

Parameter	Condition	Min.	Typ.	Max.	Unit
	BW=15M)				
Gain ripple	13+-1MHz		0.5	1.0	dB
	13+-4MHz		2.0	3.0	
Delay ripple	13+-4MHz		10	14	ns
Image rejection	All gain mode		35		dB
DC offset			±50	±100	mV
RX Current	High current mode		8.1		mA

GPS/BEIDOU mode

Parameter	Condition	Min.	Typ.	Max.	Unit
RF input frequency			1561		MHz
LO frequency	LO frequency is 4.092MHz lower than RF		1568.2		MHz
LO leakage	Measured at balun matching network input at LNA high gain		-70		dBm
Input return loss	Differential input and external matched to 50 source using balun matching network for all gain	-10			dB
Gain (Av) (integrated average over Fc+-4M)	High current mode with max. PGA gain	80	76	70	dB
	Low current mode with max. PGA gain			52	
PGA Gain range			24		dB
PGA Gain step			2		dB
Gain compression	Blocker -25dBm CW at 1,710MHz, relative to uncompressed gain, max. PGA gain		1	2	dB
NF (integrated average over Fc+-2M)	High current mode with max. PGA gain		3		dB
ΔNF at Gain=56dB	Relative to NF at max. gain		0.5	1	dB
ΔNF at Gain=46dB	Relative to NF at max. gain		2	3	dB
NF under compression	Blocker -25dBm CW at 1,710MHz, max. gain		7	10	dB
Input IP3, inband	Max. gain, +10M/+20M offset @-70dBm	-50	-45		dBm
Input IP3, outband	Max. gain, ~2,000M/2,400M@ -40dBm	-15	-10		dBm
Input IP2, outband	Max. gain, ~800M/2,400M @ -40dBm	+30	+35		dBm
Input P1 dB, inband	PGA gain=0dB, offset 500k	-58	-55		dBm
Frequency response (relative to 7.16M)	At 0~5MHz		3	4	dB
	At 33MHz		-43	-40	
	At 53MHz		-60	-57	
	At 120MHz		-83	-80	

This document contains information that is proprietary to MediaTek Inc.
Unauthorized reproduction or disclosure of this information in whole or in part is strictly prohibited.

Parameter	Condition	Min.	Typ.	Max.	Unit
	At 180MHz		-100	-97	
LPF 3 dB bandwidth	(recom. 4th order Butterworth BW=9M)		TBD		MHz
Gain ripple	7.2+-1MHz		0.5	1.0	dB
	7.2+-2MHz		1.0	2.0	
Delay ripple	7.2+-2MHz		40	70	ns
Image rejection	All gain mode		35		dB
DC offset			±50	±100	mV
RX Current	High current mode		8.1		mA

3.9.1.3 GPS Block Diagram

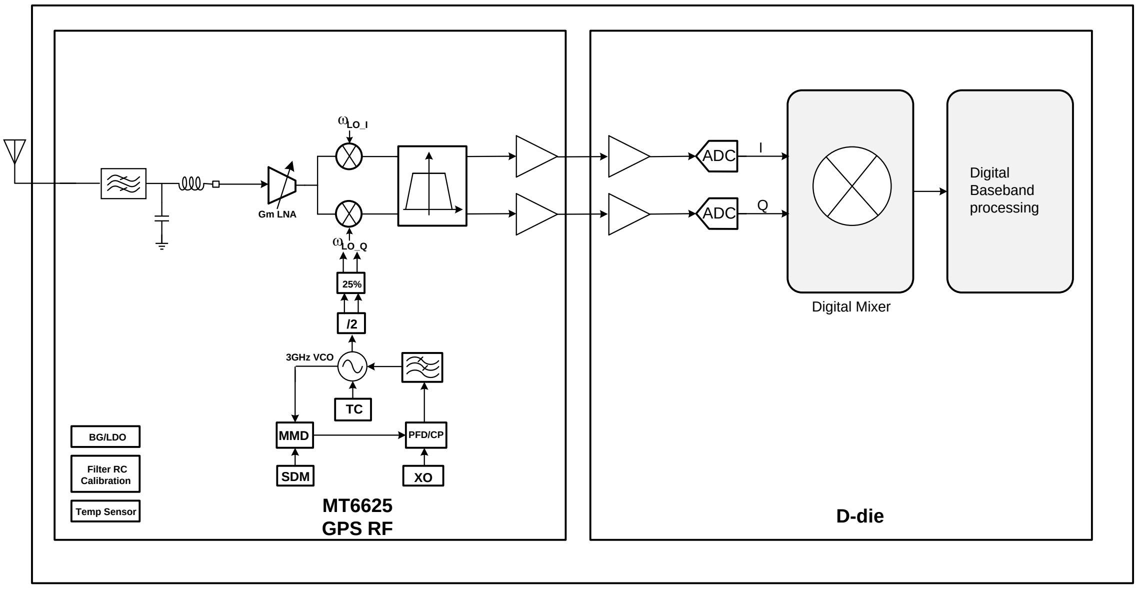

Figure 3-7. GPS block diagram

3.10 IPD

3.10.1 IPD Block Diagram for MT6625L

- Integrated ISM balun-filter
- Diplexer-5G path provides isolation to ISM band.
- GPS MN provides filtering for co-existence.
- IPD configuration supports single, dual and triple antenna.

This document contains information that is proprietary to MediaTek Inc.
Unauthorized reproduction or disclosure of this information in whole or in part is strictly prohibited.

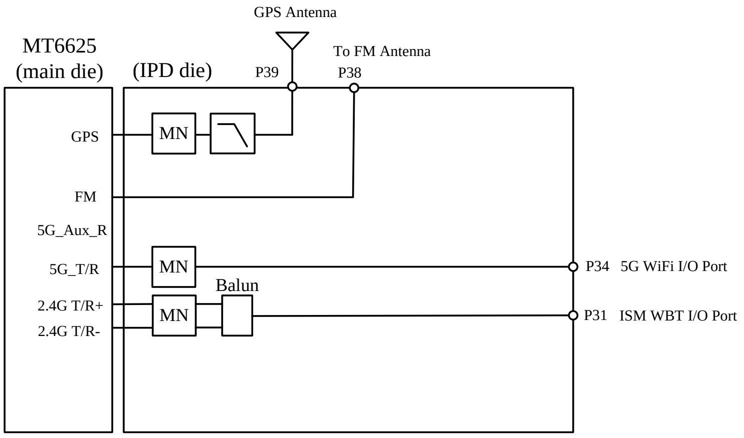

Figure 3-8. IPD block diagram for MT6625L

This document contains information that is proprietary to MediaTek Inc.
Unauthorized reproduction or disclosure of this information in whole or in part is strictly prohibited.

4 Mechanical Information

4.1 Device Physical Dimension/Part Number

MT6625/MT6625L uses QFN40 pacakge. The physical dimension is shown in Figure 4-1. MT6625L top view and part number information are shown in Figure 4-2.

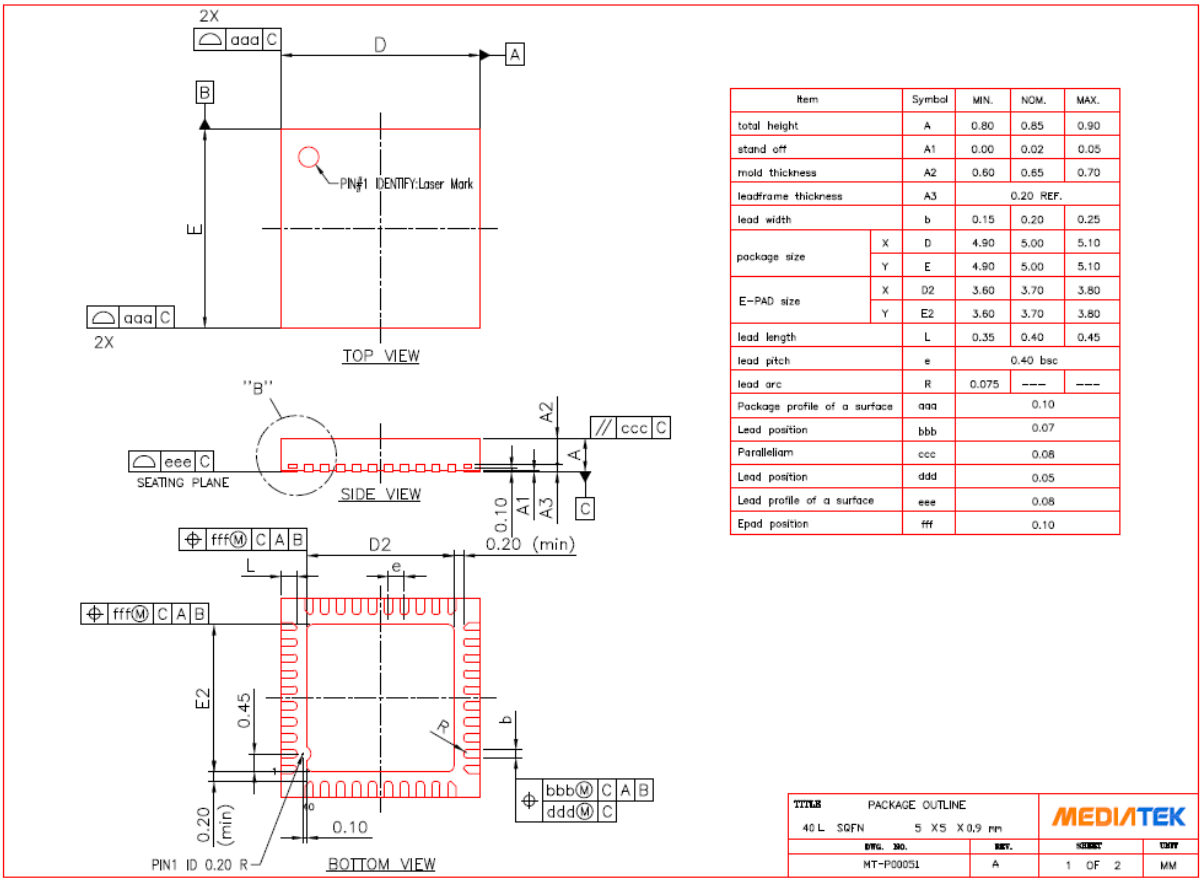

Item		Symbol	MIN.	NOM.	MAX.
total height		A	0.80	0.85	0.90
stand off		A1	0.00	0.02	0.05
mold thickness		A2	0.60	0.65	0.70
leadframe thickness		A3	0.20 REF.		
lead width		b	0.15	0.20	0.25
package size	X	D	4.90	5.00	5.10
	Y	E	4.90	5.00	5.10
E-PAD size	X	D2	3.60	3.70	3.80
	Y	E2	3.60	3.70	3.80
lead length		L	0.35	0.40	0.45
lead pitch		e	0.40 bsc		
lead arc		R	0.075	---	---
Package profile of a surface		aaa	0.10		
Lead position		bbb	0.07		
Paralleliam		ccc	0.08		
Lead position		ddd	0.05		
Lead profile of a surface		eee	0.08		
Epad position		fff	0.10		

Figure 4-1. Physical dimension of MT6625/6625L.

Description:
YYWW:Date Code
&:Subcontractor code
####:Lot No. of U1->U2->U3->U4
(U1~U4 Definition Follows Bonding Diagram)
☐:Space

Figure 4-2. Top view of MT6625L.

This document contains information that is proprietary to MediaTek Inc.
Unauthorized reproduction or disclosure of this information in whole or in part is strictly prohibited.

ESD CAUTION

MT6625/MT6625L is ESD (electrostatic discharge) sensitive device and may be damaged with ESD or spike voltage. Although MT6625/MT6625L is with built-in ESD protection circuitry, please handle with care to avoid the permanent malfunction or the performance degradation.

© 2014 - 2015 MediaTek Inc.

This document contains information that is proprietary to MediaTek Inc.
Unauthorized reproduction or disclosure of this information in whole or in part is strictly prohibited.